BJ O&PM Brazilian Journal of Operations & Production Management

ISSN 2237-8960 (Online)

ABEPRO ASSOCIAÇÃO BRASILEIRA DE ENGENHARIA DE PRODUÇÃO

RESEARCH PAPER

Relationship between Human Resource Management Practices and Employee Engagement

Kavyashree MB [1], Sridevi Kulenur[1], Nagesh P[1], TS Nanjundeswaraswamy[2]

[1]JSS Science and Technology University, Mysuru, Karnataka, Índia.
[2]JSS Academy of Technical Education, Bangalore, Karnataka, Índia.

How to cite: Kavyashree, MB et al. (2022), "Relationship between Human Resource Management Practices and Employee Engagement ", *Brazilian Journal of Operations and Production Management*, Vol. 20, No. 1, e20231331. https://doi.org/10.14488/BJOPM.1331.2023

ABSTRACT

Purpose: Employee Engagement is mainstream attention for organizations in the current business scenario. The purpose of the current research focused on analysing the relationship between HRM Practices and Employee Engagement considering employees working in various IT industries, especially considering employees working in HR Department.

Design/Methodology/Approach: The research was cross-sectional in nature and survey method was employed to collect the data. Exploratory Factor Analysis, Confirmatory Factor Analysis, Structural Equation Modelling were used to analyse the hypothesis. Data was collected among 345 employees employed in the HR department of various private sector organizations.

Results: The model fit indices were adequate and acceptable. The model fit indices obtained were: CMIN/DF = 2.909; Goodness of Fit index (GFI) = 0.945; adjusted goodness of fit index (AGFI) = 0.909; incremental fit index (IFI) = 0.976; Tucker-Lewis index (TLI) = 0.981; comparative fit index (CFI) = 0.966; root mean square error of approximation (RMSEA) = 0.06.

Findings: The results of the study disclose that HRM practices and Employee Engagement were related to each other. HRM practices in organizations empowered employees and made them more engaged to perform better in their job roles. The study results imply that HRM practices need to be considered as priority in business organizations for the long term success.

Research Limitations: Non probabilistic sample method was adopted and it was possible to gather data only from 345 employees working in the HR Department of various private sector organizations.

Practical Implications: Business organizations are constantly working towards adopting new strategies and programs in the workplace to empower employees and keep them engaged in their work roles and responsibilities. Therefore, organizations to focus on human resource management practices and implement them effectively to make their employees committed and engaged towards their job. In this context, the present research attempts to analyse the association between human resource practices and employee engagement. The results provide insights for business managers on the importance of having effective Human Resource practices to enhance employees level of engagement towards their work roles.

Originality/ Value: Current research contributes to the existing literature on Human Resource Practices and Employee Engagement. While considering the current business scenario, it becomes very important to understand the role of human resource management practices on the engagement level of employees.

Keywords: Human Resource Management (HRM) Practices; Employee Engagement; Exploratory Factor Analysis; Confirmatory Factor Analysis.

Financial support: None.
Conflict of interest: The authors have no conflict of interest to declare.
Corresponding author: kavyashreemb89@gmail.com
Received: 20 may 2022.
Accepted: 21 august 2022.
Editor: Julio Vieira Neto.

This is an Open Access article distributed under the terms of the Creative Commons Attribution License, which permits unrestricted use,distribution, and reproduction in any medium, provided the original work is properly cited.

1. INTRODUCTION

The present scenario in the business environment has been so compelling for the business organizations to adapt new strategies in the ever-changing fast circumstances in terms of employees. It is becoming difficult for the organizations to manage and engage their workforce as new responsibilities and challenges in business have become very essential for organizational success. Lack of interest and engagement among the employees the reasons behind being poor wages and benefits associated with the job, deficiency in the career development and training prospects, unproductive leadership tends to effect in disengaged behaviors by employees (Koodamara, International Journal of Scientific Research). In order to get effective level of engagement from the employees it is important to align the HR practices of the business enterprise (Chayanan Kerdpitak, 2020).

The organizations HR practices like recruitment, training and development programs, job design and reward systems were important contributors to fetch engaged employees focusing on organizational outcomes (Mohamed M. Saad, 2021).

The most important asset for business organizations are their high performing employees. They tend to be better achievers and performers than the disengaged workforce. Highly engaged employees are essential to achieve productivity and performance levels, to increase innovation and to focus towards cost reduction in recruitments and retention strategies for workers (Kazimoto, 2016). Organizational performance metrics is positively affected by engaged employees as they are more energetic and effective towards their work roles. (Kahn, 1990). Prior research studies have observed that there is significant contribution of engaged employees on performance of the organization (Katou, 2017) (Hansen, 2014), financial results (Demerouti, 2010), return on investments made (Macey, 2011) better employee performance (Bakker, 2010). Thus it becomes very essential for the organizations to focus on the development of employees and keeping them engaged for sustainable business performances and to be highly competitive (Rai, 2017). There is an increased emphasize in academic literature to understand the association between HRM practices and employee performances (Presbitero, 2017) (Vemić-Đurković, 2013).

Employee Engagement receives widespread attention in the literature, and knowing the impact of HR Practices towards engagement of employee gains little attention (Chen, 2017), (Karatepe, 2013). It is been apparent that HRM practices significantly add value in promoting positive employee and job related attitudes and degree of employee motivation (Huang, 2017), (Katou, 2017), (Othman, 2013), (Ashill, 2011) , which also positively influences employee behavior (Katou, 2017), (Huang, 2017), (Karatepe, 2013), (Christian, 2011).

As reported by (Van De Voorde, 2015), when employees receive economic as well as socio-economic resources with the help of HRM practices, they feel motivated and show more interest towards work roles and focus towards reaching the organizational goals. According to (Song, 2012), one of the predominant factors essential to repay to their employers is by being engaged towards their work roles.

It has become very essential for the managers to achieve high value business results in the present dynamic and complex business environment. It is necessary to align the strategic purposes of the business to the employees' commitment level. For the purpose of achieving high business results employees need to be recognized and valued for their contribution towards the organization. Employee Engagement is found to be enhanced by providing employees opportunities for career development, recognition for good deeds at workplace.

The present study focused on the below research questions:

1. Why Employee Engagement is very important for organizations success?
2. How HRM Practices have an influence towards Employee Engagement at workplace?

The current study, therefore is an effort to study the relationship between HRM practices (career advancement, employee participation, job security, performance feedback, rewards & recognition, training & development) and Employee Engagement.

2. LITERATURE REVIEW

2.1 Employee Engagement

The idea of engagement of employees has witnessed a boundless reception in theoretical literatures. (Kahn, 1990), was the initial researcher to term 'employee engagement' as the degree to which workforces get tangibly involved, are thoughtfully capable and focused, and psychologically attached towards job roles. Research on 'employee engagement' has concentrated in the setting of business environment.

According to (Alima Aktar, 2018), the importance and success of an organization merely

represents the positive contribution of workforce which is achieved by innovating and adopting new techniques, skills, knowledge and approaches. It is very important for the organization to transfer their focus towards human capital to stimulate their commitment and engagement behaviour.

(Yufang Huang, 2017), has opined that engaged employees can lead to various benefits like better organizational performance, job satisfaction (Whitman DS, 2010) and less turnover rates. As reported by (Yufang Huang, 2017) and also evident by the studies of (Bal PM, 2013), workers who are involved are considerably passionate about their work roles and are highly involved in organizations initiatives, while disengaged employees spend their time at workplace but are never attentive to their work responsibilities. The workforce which is engaged tends to come out with more creativeness (Mishra, 2012), exceeds performance expectations (Whitman DS, 2010) and focus towards achieving sustainable competitive advantage for their organizations. (Bruce Louis Rich, 2010).

2.2 HRM Practices

Human Resource Management Practices are integrated activities and processes which are directed towards attracting, developing and retaining the employees in organizations (Noe, 2010). According to (Alima Aktar, 2017), HRM practices need to be very specific and oriented towards the target to be achieved. The focus of HRM practices should be towards constant enhancement of employee related skills and knowledge essential for their work roles.

HRM practices like considerable scope and prospects for T&D, selection practices, keep the workforce up to date on how well the organization is performing. As reported by (Simon Albrecht, 2018), and supported by the work of (Barrick, 2015) HRM practices help to build employee firm relationship and assist as imperative antecedents of managerial engagement. As noted by (Simon Albrecht, 2018), there is little empirical research on the affiliation between HRM practices and engagement and to know which among the human resource practices are considerably related with 'employee engagement'.

2.3 HRM Practices and Employee Engagement

It is evident from the previous studies that HRM practices help in enhancing the skills, level of motivation and opportunities among the employees (Jiang, 2012). Skill improving practices like appropriate recruitment and selection, specific training programs assist in improving the skilfulness of employees' whereas opportunity improving practices, empower the employees and help them to make use of their potentiality to reach the goals of the business. Motivation enhancing techniques like career encroachment, work safety and performance advice help to increase employee level of motivation and commitment. (Jiang, 2012). The present study focuses on one of the employee behavioural outcome which is employee engagement. Therefore, HRM practices may be helpful in explaining engagement of employees.

2.4 Career Advancement and Employee Engagement

Career Advancement is a degree to which the workforce gets an opportunity to have vibrant career track inside the organization setting. As stated by (Kahn, 1990), career advancement opportunity helps employees to be psychologically safe which makes them to be motivated and perform well in their jobs. According to (Batista, 2013), career prospects are one of the significant expedient for motivating workers towards work related actions in a optimistic way. When employees are provided with career advancement opportunities at their workplace, they feel empowered and invest themselves by contributing in a positive way towards their work roles and organization (Van De Voorde, 2015). As reported by (Huang, 2017), career development opportunities at workplace links with positive employee attitudes and behaviours and makes them enthusiastic and dedicated while performing their job. The research results of (Alima Aktar, 2017), also support that appropriate HRM practices in the workplace helps employees to have strong signals that they are recognized and valued by their employer. Career advancement opportunities reflects management's commitment towards their employees.

With this view, the hypothesis was framed

as H01: There is no relationship between career advancement and employee engagement.

2.5 Employee participation and Employee Engagement

Employee Participation is the degree to which workers get involved with the business leaders in

discussions focused towards achieving the business goals and objectives. When employees are involved in the decisions making process and suggestive discussion forums their behavioural consequences such as Organizational Commitment and Employee Engagement gets enhanced and in turn helps to achieve business objectives (Alima Aktar, 2018). (Ugwu, 2017), opined that it is essential for workers to get involved in participative decision-making process as it helps them to incorporate positive attitude aligned with better performance, which is also supported by the studies of (Kıngır, 2010). Decisions involving employees' Participation helps to create sense of trust and association towards the organization, creates a healthy work environment which reduces stress and positively affects employee engagement (Martin, 2015). High level of employee participation facilitates employee positive behaviour at workplace to attain competitive advantage.

Based on the insights obtained the hypothesis was framed as,

H02: There is no relationship between employee participation and employee engagement.

2.6 Job Security and Employee Engagement

Job security is the extent, where a business enterprise can provide a secured employment opportunity and comfortable environment among their workforce. It is also the grade which a worker can continue to work in their business for a certain duration of time. It is evident from academic research works that job security acts as a variable of employee motivation for and results in positive performance. Empirical studies conducted by (Chen, 2017), (Ugwu, 2017) has found that job security encourages employees to perform better and reduce negative work attitudes. It is also found that job security affects positive outcomes in employees.

The following hypothesis was framed H03: There is no relationship between job security and employee engagement (EE).

2.7 Performance Feedback and Employee Engagement (EE)

Performance appraisal system is noted be the predominant predictor of among the management practices which has a greater influence on employee engagement (Gruman, 2011). Feedback on performance is the degree to which the workforce has the opportunity to gather significant information about their performance which may help in constant improvement, learning and developing required skills while actually performing the job which is assigned (Alima Aktar, 2018). According to (Volpone, 2012), an appropriate performance feedback helps in creating a positive psychological climate by enlarge helping in increased level of employee engagement. Employees having to known to get positive feedback are considered to be having higher levels of engagement. (Alima Aktar, 2018). Similarly, (Rao, 2017) opined when adequate and appropriate feedback is provided on the performance of employees it helps them to capture on their strengths, helps in overcoming their weakness and make them captivated in their assigned work roles. The studies carried by (Ugwu, 2017), (Sarti, 2014), have found that there is a noteworthy association among employee performance feedback and engagement.

Based on the insights obtained the following hypothesis was framed

H04: There is no relationship between performance feedback and employee engagement (EE).

2.8 Rewards & Recognition and Employee Engagement

Employee reward is a programs initiated by a business enterprise to reward the performance and motivate the employees at individual, team and organization levels. According to (Jones, 2019), Employee recognition is a kind of acknowledgement to employees who have outperformed in their job roles. As per the recent statistic 90% of employees opined that recognition programme has an impact on their engagement and motivational levels. Rewards and recognition are very important resources which motivate employees to accomplish organization goals. As opined by, (Karatepe, 2013) rewards and recognition programs are likely to enhance the service behaviour of employees. Business organizations are using reward and recognition programs as an tool of appreciation which helps in better employee performance, likely to have an impact on employees behaviour in a positive way and enhance the degree of engagement (Kimberley Breevaart, 2014). Previous studies like (Presbitero, 2017), (Alias, 2014), (Karatepe, 2013) support the viewpoint which tells reward is one of the significant element of work that motivates employees to increase their level of engagement. According to (Karatepe, 2013), when employees are entitled to rewards and recognition from the superiors and business leaders, they become enthusiastic to work with the organization, and feel highly engaged. Therefore, the present research assumes a positive association among rewards and recognitions and employee engagement.

The following hypothesis was framed

H05: There is no relationship between reward & recognition and employee engagement (EE).

2.9 Training & Development and Employee Engagement

Training and Development (T&D) is measured as one of the important functional system of the business enterprise which focuses towards the betterment of individual performance. It helps employees to focus towards the attainment of business goals and objectives. As opined by (Alima Aktar, 2018), training and development programs are organized by the organizations for the purpose of enhancing the skill, abilities and knowledge which in turn helps employees to handle complex business situations in a more positive way. A lot of works in HRM literature have recognized that T&D is the significant predictor of employee performance and behaviour (Huang, 2017), (Swee C. Goh, 2013). In his work employee engagement and disengagement (Kahn, 1990), stated that organizations facilitate the use of resources to employees with the help of training and development programs to ensure that they have capability to outperform which aids to improve the engagement level. T&D activities helps to the build the confidence level of employees to work better and increases the sense of responsibility in work roles (Presbitero, 2017), (Gruman, 2011). It also helps to enhance the psychological health of employees thereby increasing their level of engagement (Gruman, 2011). Thus by understanding the role and importance of training and development (T&D) to enhance employee engagement, the following hypothesis was framed

H06: There is no relationship between training and development and employee engagement.

3. RESEARCH METHODOLOGY

The survey method adopted for the purpose of gathering the data is cross sectional in nature, as it helps to fetch information and analyse the hypothesis. The samples for the present study were incorporated from the workforce who are a part of private sector organizations and currently working in HR Department. The samples were collected from respondents in and around Mysore and Bangalore region. Simple random sampling method was adopted to collect the responses. The responses were collected with a help of online survey method by using google forms. A total of 345 responses were collected.

3.1 Scope of the Study

The current research was confined to IT organizations in and around Mysore and Bangalore region. The employees who took part in the survey were from Human Resource department.

3.2 Measures

All measures were adapted from the previously published articles. However, the statements were modified for better understanding and to fetch correct response form the respondents. HRM Practices like career advancement (CD), employee participation (EP), job security (JS), performance feedback (PF), rewards & recognition (RR), training & development (T&D) with a total of 24 items were adopted with the help extensive literature review (Saks, 2006), (George, 2001). Participants were requested to indicate their responses in a five-point Likert scale varying from 1- strongly agree to 5 – strongly disagree. The measurement scale consisting of 17 items for employee engagement was adopted from (WILMAR B. SCHAUFELI, 2002) which includes vigour, dedication and absorption. Participants were requested to indicate their viewpoints in a five-point Likert scale varying from 1- strongly agree to 5 – strongly disagree.

3.3 Statistical Analysis

The data and information was processed by using SPSS software. KMO test to check the adequacy of the data, exploratory factor analysis, confirmatory factor analysis was employed to explore and verify the factor structure. Structural Equation Modelling (SEM) was adopted to analyse the structural relationships.

4. RESULTS

4.1 KMO Test

To verify the adequacy of the samples Kaiser-Meyer-Olkin test was performed. KMO test helps in measuring the adequacy of the sample in the whole model and individual variables in the model. KMO test was conducted separately for HRP practices and employee engagement to check the adequacy of the data.

4.2 KMO test for HRP

For the collected data KMO value is 0.794. As per (Kaiser, 1974), when the KMO value is greater than 0.6, the sample is known to be adequate to carry out factor analysis. Therefore, in the current study the KMO value of 0.794 is sufficient and adequate to conduct factor analysis. The data is presented in the table no.1

Bartlett's test of sphericity was conducted for the data collected. The test statistic values of approximate chi-square value 3453.826, degrees of freedom 0.190 and significance level 0.00, infers that the data is sufficient to carry out factor analysis.

Table 1 - KMO and Bartlett's Test.

KMO and Bartlett's Test		
Kaiser-Meyer-Olkin Measure of Sampling Adequacy		.794
Bartlett's Test of Sphericity	Approx. Chi-Square	3453.826
	Df	190
	Sig.	.000

Table 2 - Summary of Principal Component Analysis.

Total Variance Explained									
Component	Initial Eigenvalues			Extraction Sums of Squared Loadings			Rotation Sums of Squared Loadings		
	Total	% of Variance	Cumulative %	Total	% of Variance	Cumulative %	Total	% of Variance	Cumulative %
1	4.940	24.702	24.702	4.940	24.702	24.702	2.936	14.681	14.681
2	3.308	16.541	41.243	3.308	16.541	41.243	2.585	12.923	27.604
3	2.083	10.416	51.659	2.083	10.416	51.659	2.436	12.178	39.782
4	1.563	7.813	59.472	1.563	7.813	59.472	2.324	11.619	51.401
5	1.510	7.549	67.021	1.510	7.549	67.021	2.321	11.604	63.005
6	1.364	6.822	73.844	1.364	6.822	73.844	2.168	10.838	73.844
7	.717	3.585	77.429						
8	.571	2.856	80.285						
9	.545	2.725	83.010						
10	.487	2.434	85.444						
11	.423	2.117	87.561						
12	.391	1.953	89.514						
13	.387	1.935	91.448						
14	.322	1.612	93.060						
15	.291	1.453	94.513						
16	.254	1.269	95.782						
17	.241	1.207	96.989						
18	.225	1.123	98.112						
19	.201	1.004	99.116						
20	.177	.884	100.000						
Extraction Method: Principal Component Analysis.									

4.3 Exploratory Factor Analysis (EFA)

The EFA was performed by using SPSS software to discover the factor structure and item reduction by making use of principal component analysis (PCA) method Varimax with Kaiser

normalization rotation. The exploration resulted in six factors through 20 items having loadings more than 0.542 and above. Table 3, specifies item-wise factor loadings of six HRP Practices: Career Advancement, Employee Participation, Job Security, Rewards and Recognition, Performance Feedback, Training and Development. Table no.3 indicates the item loadings of all the HRP practices.

With the help of EFA, the extracted HRP Practices were: Career Advancement (Huang, 2017), (Van De Voorde, 2015), (Jiang, 2012); Employee Participation (Alima Aktar, 2018), (Ugwu, 2017), (Martin, 2015), (Jiang, 2012), (Kıngır, 2010); Job Security (Chen, 2017), (Ugwu, 2017), (Jiang, 2012); Rewards and Recognition (Jones, 2019), (Presbitero, 2017), (Kimberley Breevaart, 2014), (Karatepe, 2013); Performance Feedback (Alima Aktar, 2018), (Ugwu, 2017), (Sarti, 2014), (Volpone, 2012); Training and Development (Alima Aktar, 2018), (Huang, 2017), (Swee C. Goh, 2013), (Gruman, 2011). For the purpose of validating the above six HRP Practices, CFA was carried out.

Table 3 - Factor Loadings for HRP.

Components Names	Rotated Component Matrixa						
		Component					
		1	2	3	4	5	6
Career Advancement	CA2	.806					
	CA3	.799					
	CA1	.796					
	CA4	.738					
Employee Participation	EP2		.923				
	EP3		.909				
	EP1		.905				
Job Security	JS1			.846			
	JS3			.843			
	JS2			.774			
	JS4			.542			
Rewards and Recognition	RR2				.858		
	RR1				.856		
	RR3				.814		
Performance Feedback	PF1					.855	
	PF3					.824	
	PF2					.817	
Training and Development	TD1						.845
	TD2						.791
	TD3						.765
Extraction Method: Principal Component Analysis. Rotation Method: Varimax with Kaiser Normalization.							
a. Rotation converged in 5 iterations.							

4.4 Confirmatory Factor Analysis (CFA)

For the purpose verifying the factor structure of the observed variables/extracted items and factors in the EFA, CFA was carried out by adopting Structural Equation Modelling. The model indicated and confirmed six components with 20 items. The factors which were confirmed are: Career Advancement (CA), Employee Participation(EP), Job Security(JS), Rewards and Recognition (RR), Performance Feedback (PF), and Training and Development(TD). The measurement model is indicated in the Figure 1.

Further, the confirmed measurement model is analysed for different model fit indices; like CMIN/DF value of 2.047. According to, (Hair Junior, 1998), CMIN value should be less than 3 for a good model, which is supported with the CMIN value of 2.047 in the present study. The model fit indices obtained for the present study are GFI= 0.919, AGFI 0.900,IFI==0.953, TLI= 0.940, CFI=0.952, which are more than 0.9 required for a good model fit and RMSEA = 0.05, which is less than 0.08 required for a good model fit (Hair Junior, 1998). Therefore, it is noted that the established measurement model is satisfactory and the items tend to collect the required evidence from the study respondents.

Figure 1 - Measurement model for HRP practices.

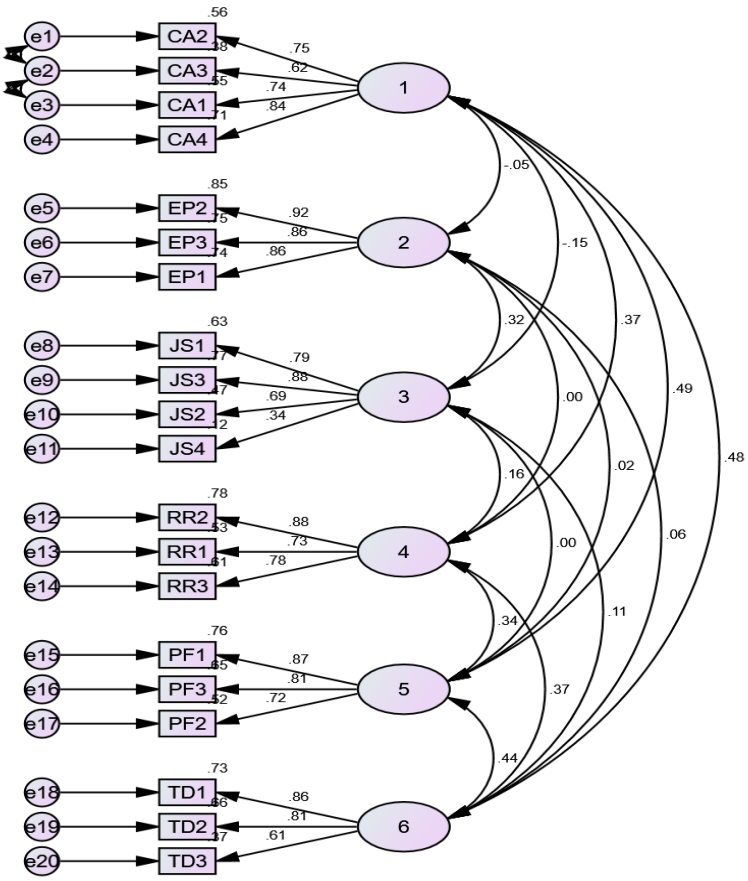

4.5 KMO test for EE

For the gathered data on Employee Engagement the KMO value is 0.754. According to (Kaiser, 1974), when the KMO value is greater than 0.6, the sample is noted to be acceptable to carry factor analysis. Therefore, in the current study since the KMO value is 0.754, which is greater than 0.6, it is adequate to conduct factor analysis. The data is presented in the table no. 4

Bartlett's test of sphericity was conducted for the data collected. The test statistic values; approximate chi-square value 1591.83, degrees of freedom 0.55 and significance level 0.00, infers that the data is sufficient to carry out factor analysis.

Table 4 - KMO and Bartlett's Test.

KMO and Bartlett's Test		
Kaiser-Meyer-Olkin Measure of Sampling Adequacy.		**0.754**
Bartlett's Test of Sphericity	Approx. Chi-Square	1591.83
	Df	55
	Sig.	0

Table 5 - Summary of Principal Component Analysis.

Total Variance Explained									
Component	Initial Eigenvalues			Extraction Sums of Squared Loadings			Rotation Sums of Squared Loadings		
	Total	% of Variance	Cumulative %	Total	% of Variance	Cumulative %	Total	% of Variance	Cumulative %
1	3.44	31.339	31.339	3.44	31.33	31.339	3.28	29.86	29.8

	7			7	9		5	3	63
2	2.681	24.374	55.714	2.681	24.374	55.714	2.265	20.587	50.449
3	1.444	13.129	68.842	1.444	13.129	68.842	2.023	18.393	68.842
4	0.67	6.089	74.931						
5	0.582	5.291	80.222						
6	0.516	4.694	84.916						
7	0.467	4.241	89.157						
8	0.394	3.583	92.74						
9	0.301	2.74	95.481						
10	0.253	2.299	97.78						
11	0.244	2.22	100						
Extraction Method: Principal Component Analysis.									

4.6 Exploratory Factor Analysis (EFA)

EFA was carried out using SPSS software to find out the factor structure and item reduction by making use of principal component analysis (PCA) method varimax with Kaiser normalization rotation. The analysis resulted in three factors with 11 items having loadings more than 0.727 and above. Table no. 6 indicates item wise factor loadings of three Employee Engagement dimensions: Vigour, Dedication and Absorption. Below table indicates the item loadings of all the three dimensions of Employee Engagement.

With the help of EFA, the extracted Employee Engagement dimensions were: Vigor (Khahan Na-Nan, 2020), (Saks, 2019), (Navneet Gera, 2019); Dedication (Khahan Na-Nan, 2020), (Saks, 2019), (Navneet Gera, 2019); Absorption (Khahan Na-Nan, 2020), (Saks, 2019), (Navneet Gera, 2019). For the purpose pf validating the three dimensions CFA was carried out.

Table 6 - Factor Loadings for EE.

Components Names	Rotated Component Matrixa			
		Component		
		1	2	3
Vigor	VR1	0.842		
	VR4	0.812		
	VR2	0.797		
	VR3	0.794		
	VR5	0.727		
Absorption	AB3		0.874	
	AB2		0.852	
	AB1		0.823	
Dedication	DE1			0.883
	DE2			0.794
	DE3			0.732
Extraction Method: Principal Component Analysis.				
Rotation Method: Varimax with Kaiser Normalization.				
a. Rotation converged in 5 iterations.				

4.7 Confirmatory Factor Analysis (CFA)

For the purpose verifying the factor structure of the observed variables/extracted items and factors in the EFA, CFA was carried out with the help of Structural Equation Modelling. The model indicated and confirmed three dimensions with 11 items. The factors which were confirmed are: Vigour (VR), Dedication (DE) and Absorption (AB). The measurement model is indicated in figure no. 2

Further, the confirmed measurement model is analysed for different model fit indices; like CMIN/DF value of 2.509. According to, (Hair Junior, 1998), CMIN value should be less than 3 for a good model, which is supported with the CMIN value of 2.509 in the present study. The model fit indices obtained for the present study are GFI= 0.933, AGFI 0.899 ,IFI==0.936, TLI= 0.911, CFI=0.936, which are more than 0.9 required for a good model fit and RMSEA = 0.07, which is less than 0.08 required for a good model fit (Hair Junior, 1998). Therefore, it can be noted that the confirmed measurement model is acceptable and the items tend to collect the required information from the study respondents.

Figure 2 - Measurement model for EE.

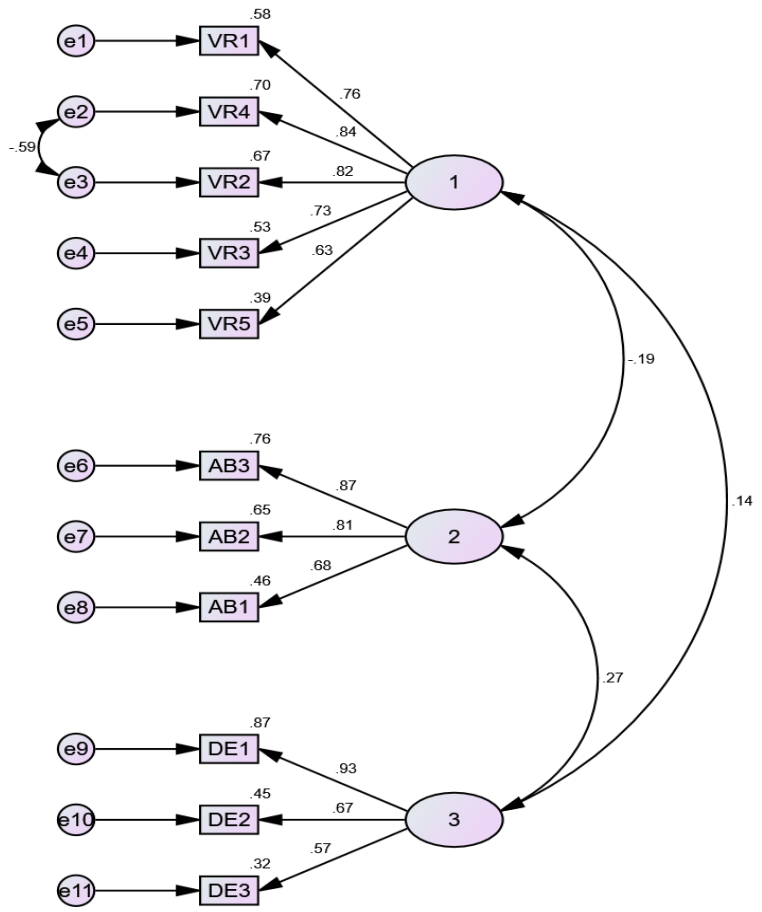

4.8 Relationship between HRP and EE

For the purpose of analysing the structural relationships structural equation modelling (SEM) was carried out for HRP and EE. The model fit indices were found to be acceptable. The model fit indices obtained were: CMIN/DF = 2.909; Goodness of Fit index (GFI) = 0.945; adjusted goodness of fit index (AGFI) = 0.909; incremental fit index (IFI) = 0.976; tucker-Lewis index (TLI) = 0.981; comparative fit index (CFI) = 0.966; root mean square error of approximation (RMSEA)

= 0.06. Below figure represents the SEM model.

Figure 3 - SEM model.

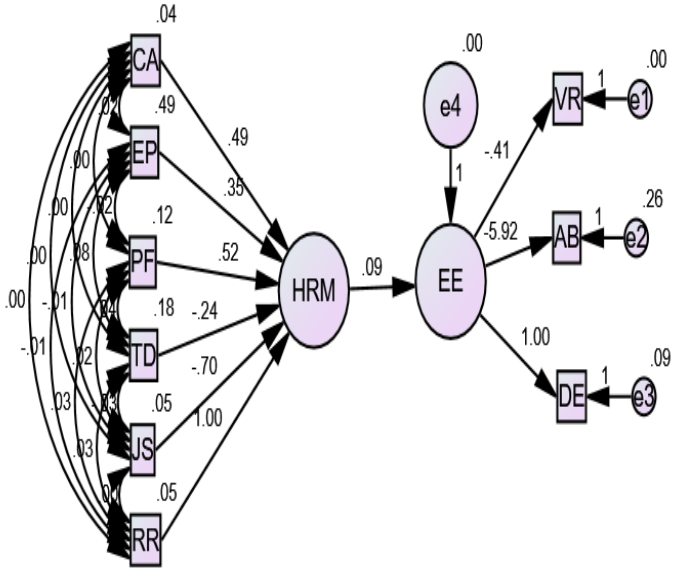

Table 7 - Path model analysis statistics.

Components			Estimate	S.E.	C.R.	P	Significance
CA	<-->	EP	.019	.007	2.648	.008	
CA	<-->	PF	.000	.004	-.095	.924	
CA	<-->	TD	-.003	.004	-.717	.473	
CA	<-->	JS	.001	.002	.336	.737	
CA	<-->	RR	.001	.002	.473	.637	
EP	<-->	PF	-.019	.013	-1.465	.143	
EP	<-->	TD	.081	.016	5.093	***	
EP	<-->	JS	-.010	.008	-1.275	.202	
EP	<-->	RR	-.011	.008	-1.332	.183	
PF	<-->	TD	.040	.008	5.026	***	
PF	<-->	JS	.015	.004	3.772	***	
PF	<-->	RR	.034	.004	7.673	***	
TD	<-->	JS	-.032	.005	-6.228	***	
TD	<-->	RR	.030	.005	5.936	***	
JS	<-->	RR	.001	.003	.392	.695	

4.9 Findings of the Study

From the above analysis conducted it is evident that HRM practices are predominant predictors of Employee Engagement. The test statistics reveal that there is a positive relationship between Career Advancement and Employee Engagement, Employee Performance and Employee Engagement, Performance Feedback and Employee Engagement, Training and Development and Employee Engagement and Job Satisfaction and Employee Engagement. The hypothesis formulated were accepted and the study was found to a significant contributor to the field of employee engagement.

The present study is a wise attempt is to explore the relationship between HRM practices and Employee Engagement. For the purpose of the study six various HRM practices are selected with the help of extensive literature review; the HRM Practices were considered based on the extent of their importance and usage in academic literatures. The HRM practices selected were Career Advancement (CA), Employee Participation (EP), Job Security (JS), Rewards and Recognition (RR), Performance Feedback (PF), Training and Development (TD).

A survey instrument was designed considering the previous studies of (Saks, 2006), (George, 2001) for HRM practices and (WILMAR B. SCHAUFELI, 2002) for Employee Engagement. However, the statements in the instrument were not directly adopted from the previous studies, but were modified and refined pertaining to the present purpose of the research and the respondents selected to conduct the study. Respondents were requested to provide their responses in a five-point Likert scale varying from 1- strongly agree to 5 – strongly disagree.

The survey instrument was analysed to clarify the validity of the instrument, EFA was carried out to reduce the factors. The extracted factors were Career Advancement (CA), Employee Participation (EP), Job Security (JS), Rewards and Recognition (RR), Performance Feedback (PF), Training and Development (TD); resulting in 20 items with values greater than 0.542. CFA was carried out to validate the factors. The model fit indices were found to be in acceptable range. EFA was further carried out to validate the employee engagement variables; vigor, dedication and absorption. CFA was carried out and the instrument was found to be valid; model fit indices were in acceptable range. To examine the relationship between HRM Practices and Employee Engagement SEM and Path Analysis Statistics were performed. The model fit indices were in acceptable range. The study results found that there was relationship between HRM practices and engagement level of employees.

5. CONCLUSION

The biggest challenge faced by the organizations in the current business scenario is to retain and engage their employees to the fullest potential possible. A crucial task for the human resource management system is design appropriate HRM practices to empower employees and make them engaged towards their job roles. The current study was carried out to investigate the impact of HRM practices on employee engagement. The study results reveal that HRM practices and employee engagement were related to each other. HRM practices in organizations empowered employees and made them more engaged to perform better in their job roles. The study results are in association with the findings and suggestions of (Alima Aktar, 2018), (Alima Aktar, 2017), (Chen, 2017), (Van De Voorde, 2015), and (Alias, 2014), that HRM practices when effectively introduced and implemented well in the organizations helps in improving the engagement level of employees in their job roles. The study results imply that HRM practices need to considered as priority in business organizations for the long term success.

The implementation of effective HRM practices in the organizations indicates to the employees that they are valuable assets of the organization. Providing suitable career development opportunities enable the employees to progress in their career , and inculcates a spirit within themselves to put efforts in their work roles (Huang, 2017). Job Security interventions at the workplace makes the employees to feel secured, they tend to exert their fullest potential in their jobs (Chen, 2017).

The results provide insights for business managers on the importance of having effective HRM practices to enhance the employees level of engagement towards their work roles.

Business organizations are incorporating various employee engagement programs for the purpose of retaining potential workforce and keeping them engaged in their work roles, thus contributing to the overall success of the business. The present study results are making an attempt to gather the most relevant and important HRM practices that help in engaging the workforce and make them contribute to themselves and the organization.

5.1 Limitations and Future Directions

The data was gathered only from 345 employees working in various IT industries, because of non-probability sampling method which was adopted as a part of research work. Therefore, the study results cannot be generalized to all sectors. The further research works in the area can focus on other HRM practices which are not considered in the present study and also check the relevance of HRM practices and Employee Engagement in other industry sectors.

REFERENCES

Alias, N.N.N.A.H.R. (2014), "Examining the mediating effect of employee engagement on the relationship between talent management practices and employee retention in the Information and Technology (IT) organizations in Malaysia", *Journal of Human Resources Management and Labor Studies*, pp. 227-242. DOI: https://doi.org/10.1007/978-981-287-426-9_9

Alima Aktar, D.F.P. (2017), "The Relationship between Employee Engagement, HRM practices and Perceived Organizational Support: Evidence from Banking Employees", *International Journal of Human Resource Studies*, pp. 1-22. DOI: https://doi.org/10.5296/ijhrs.v7i3.11353

Alima Aktar, F.P. (2018), "Mediating role of organizational commitment in the relationship between human resource management practices and employee engagement: Does black box stage exist?", *International Journal of Sociology and Social Policy*. DOI: https://doi.org/10.1108/ijssp-08-2017-0097

Ashill, N.R.M. (2011), "Burnout processes in non-clinical health service encounters", *Journal of Business Research*, pp. 1116-1127. DOI: https://doi.org/10.1016/j.jbusres.2010.11.004

Bakker, A.B.M. (2010), "Weekly work engagement and performance: A study among starting teachers", *Journal of Occupational and Organizational Psychology*, pp. 189-206. DOI: https://doi.org/10.1348/096317909x402596

Bal PM, T.D.S.D.J. (2013), "How do developmental and accommodative HRM enhance employee engagement and commitment? The role of psychological contract and SOC strategies", *Journal of Management Studies*, p. 545–572. DOI: https://doi.org/10.1111/joms.12028

Barrick, M.T.G.S.T. a. C.S. (2015), "Collective organizational engagement: linking motivational antecedents, strategic implementation, and firm performnace", *Academy of Management Journal*, pp. 111-135. DOI: https://doi.org/10.5465/amj.2013.0227

Batista, M.F.A. and S.F. (2013), "Quality management and employees' attitudes: an example from certified enterprises", *Management Research: The Journal of the Iberoamerican Academy of Management*, pp. 260-279. DOI: https://doi.org/10.1108/mrjiam-01-2012-0468

Bruce Louis Rich, J.A.L.E.R.C. (2010), "Job Engagement: Antecedents and Effects on Job Performance", *Academy of Management Journal*, pp. 617-635. DOI: https://doi.org/10.5465/amj.2010.51468988

Chayanan Kerdpitak, K.J. (2020), *The Impact of Human Resource Management Practices on Competitive Advantage: Mediating Role of Employee Engagement in THailand*. Sys Rev Pharm 2020.

Chen, S. (2017), "Cross-level effects of high-commitment work systems on work engagement: the mediating role of psychological capital", *Asia Pacific Journal of Human Resources.* DOI: https://doi.org/10.1111/1744-7941.12144

Christian, M.G.A. A.S. J. (2011), "Work engagement: A quantitative review and test of its relations with task and contextual performance", *Personnel psychology*, pp. 89-136. DOI: https://doi.org/10.1111/j.1744-6570.2010.01203.x

Demerouti, E.a.C.R. (2010), *Rom thought to action: Employee work engagement and job performance. Work engagement: A handbook of essential theory and research*. pp. 147-163.

George, J.Z. a. J.M. (2001), "When Job Dissatisfaction Leads to Creativity: Encouraging the Expression of Voice", *The Academy of Management Journal*, pp. 682-696. DOI: https://doi.org/10.5465/3069410

Gruman, J.A. &. S.A.M. (2011), "Performance management and employee engagement", *Human Resource Management Review*, pp. 123-136. DOI: https://doi.org/10.1016/j.hrmr.2010.09.004

Hair Junior, J.A.R.T.R. e. a. (1998), *Multivariate data analysis: Testing the Fit of the BANKSERV Model to BANKPERF Data*. s.l.: Prentice-Hall.

Hansen, A.B.Z. a. K. C. (2014), "How interpersonal leadership relates to employee engagement", *Journal of Managerial Psychology*, pp. 953-972. DOI: https://doi.org/10.1108/jmp-11-2012-0343

Huang, Y.M.Z. a. M.Y. (2017), "High-performance work systems and employee engagement: empirical evidence from China", *Asia Pacific Journal of Human Resources*. DOI: https://doi.org/10.1111/1744-7941.12140

Jiang, K.L.D.P.H.J. and B.J.C. (2012), "How does human resource management influence organizational outcomes? A meta-analytic investigation of mediating mechanisms", *Academy of management Journal*, pp. 1264-1294. DOI: https://doi.org/10.5465/amj.2011.0088

Jones, M. (2019), *Why is Employee Reward and Recognition so Important?*, s.l.: Petaurum Solutions.

Kahn, W. (1990), "Psychological conditions of personal engagement and disengagement at work", *Academy of management journal*, pp. 692-724. DOI: https://doi.org/10.2307/256287

Kaiser, H.a.R.J. (1974), "Little jiffy, Mark IV. *Educational and Psychological Measurement*, pp. 111-117. DOI: https://doi.org/10.1177/001316447403400115

Karatepe, O. (2013)", High-performance work practices and hotel employee performance: The mediation of work engagement", *International Journal of Hospitality Management*, pp. 132-140. DOI: https://doi.org/10.1016/j.ijhm.2012.05.003

Katou, A. (2017), "How does Human Resource Management influence Organisational Performance? An Integrative Approach Based Analysis", *International Journal of Productivity and Performance Management.* DOI: https://doi.org/10.1108/ijppm-01-2016-0004.

Kazimoto, P. (2016), "Employee engagement and organizational performance of retails enterprises", *American Journal of Industrial and Business Management*, p. 516–525. DOI: https://doi.org/10.4236/ajibm.2016.64047

Khahan Na-Nan, P.P.K.C. (2020), "Employee engagement in small and medium-sized enterprises in Thailand: the construction and validation of a scale to measure employees", *International Journal of Quality and Reliability Management*. DOI: https://doi.org/10.1108/ijqrm-10-2018-0290

Kimberley Breevaart, A.B.J.H.E.D.O.K.O.R.E. (2014), "Daily transactional and transformational leadership and daily employee engagement", *Journal of Occupational and Organizational Psychology*, pp. 138–157. DOI: https://doi.org/10.1111/joop.12041

Kıngır, S. &. M.M. (2010), "Factors that affect hotel employees motivation the case of Bodrum Serbian", *Journal of Management*, pp. 59-76.

Koodamara, N. (2017), "Procedural justice, distributive justice and interactional justice as the antecedents of employee engagement International", *Journal of Scientific Research*, pp. 3-30.

Macey, W.S.B.B.K.Y.S. (2011), *Employee engagement: Tools for analysis, practice, and competitive advantage*. John Wiley & Sons.

Martin, S.B.S.T.T.A. (2015), "Employee participation and engagement in working for the environment" *Personnel Review*, pp. 492-510. DOI: https://doi.org/10.1108/pr-10-2013-0179

Mishra, S.C.A.S. (2012), "A framework towards employee engagement: the PSU experience", *ASCI Journal of Management*, p. 92–110.

Mohamed M. Saad, H.R.G.A.A.L. (2021), "Investigating the impact of human resource management practices on employee engagement, and the moderating role of strategy implementation in Egypt", *SA Journal of Human Resource Management*. DOI: https://doi.org/10.4102/sajhrm.v19i0.1412

Navneet Gera, R.K.S.D.P.S. (2019), "Absorption, vigor and dedication: determinants of employee engagement in b-schools", *Indian Journal of Economics & Business*, pp. 61-70.

Noe, R.A.H.J.R.G.B. &. W.P.M. (2010), *Human Resources Management: Gaining a Competitive Advantage*.

Othman, N. (2013), "Social support and work engagement: a study of Malaysian nurses", *Journal of Nursing Management*, pp. 1083-1090. DOI: https://doi.org/10.1111/j.1365-2834.2012.01448.x

Presbitero, A. (2017), "How do changes in human resource management practices influence employee engagement? A longitudinal study in a hotel chain in the Philippines", *Journal of Human Resources in Hospitality and Tourism*, pp. 56-70. DOI: https://doi.org/10.1080/15332845.2016.1202061

Rai, A.R.A.G.P.G.P.C.R.C.R.M.N. (2017), "Influence of job characteristics on engagement: does support at work act as moderator?" *International Journal of Sociology and Social Policy*, pp. 86-105. DOI: https://doi.org/10.1108/ijssp-10-2015-0106

Rao, M.S. &. R.M.S. (2017) "Innovative tools and techniques to ensure effective employee engagement", *Industrial and Commercial Training*, pp. 127-131. DOI: https://doi.org/10.1108/ict-06-2016-0037

Saks, A.M. (2006), "Antecedents and consequences of employee engagement", *Journal of Managerial Psychology*, pp. 600-619. DOI: https://doi.org/10.1108/02683940610690169

Saks, A.M. (2019), "Antecedents and consequences of employee engagement revisited", *Journal of Organizational Effectiveness: People and Performance*, pp. 19-38. DOI: https://doi.org/10.1108/joepp-06-2018-0034

Sarti, D. (2014), "Job Resources as Antecedents of Engagement at Work: Evidence From a Long-Term Care Setting", *Human Resource Development Quarterly*, pp. 213-237. DOI: https://doi.org/10.1002/hrdq.21189

Simon Albrecht, E.B.A.M. (2018), "Organizational resources, organizational engagement climate, and employee engagement", *Career Development International*, pp. 67-85. DOI: https://doi.org/10.1108/cdi-04-2017-0064

Song, J.K.J.L.U. &. K.H. (2012), "Role of transformational leadership in effective organizational knowledge creation practices: Mediating effects of employees' work engagement", *Human Resource Development Quarterly*, p. 65–101. DOI: https://doi.org/10.1002/hrdq.21120

Swee C. Goh, I.P. (2013), "Applying action learning to executive management training and development: integrating reflections, experience, content and action", *International Journal of Human Resources Development and Management*, pp. 23-41. DOI: https://doi.org/10.1504/ijhrdm.2013.052149

Ugwu, C.C. (2017), "Human resource management (HRM) practices and work engagement in Nigeria: The mediating role of psychological capital (PSYCAP)", *International Journal of Social Sciences and Humanities Review*.

Van De Voorde, K.B.S. (2015), "The role of employee HR attributions in the relationship between high-performance work systems and employee outcomes", *Human Resource Management Journal*, pp. 62-78. DOI: https://doi.org/10.1111/1748-8583.12062

Vemić-Đurković, J. J. J.M. R. (2013), "A comparative analysis of contribution of human resource management to organizational performance of banks in Serbia", *Industrija*, pp. 91-107. DOI: https://doi.org/10.5937/industrija41-4487

Volpone, S.A.D. &. M.P. (2012), "Linkages between racioethnicity, appraisal reactions, and employee engagement", J*ournal of Applied Social Psychology*, pp. 252-270. DOI: https://doi.org/10.1111/j.1559-1816.2011.00877.x

Whitman D.S.D.V.R. a. C.V. (2010)", Satisfaction, citizenship behaviors, and performance in work units: a meta-analysis of collective construct relation", *Personnel Psychology*, p. 41–81. DOI: https://doi.org/10.1111/j.1744-6570.2009.01162.x

Wilmar B., Schaufeli, M.S.V. G.-R.A. a. A.B.B (2002), "The Measurement of Engagement and Burnout: A Two

Sample Confirmatory Factor Analytic Approach", *Journal of Happiness Studies*, pp. 71-92.

Yufang Huang, Z.M.Y.M. (2017), "High-performance work systems and employee engagement: empirical evidence from China", *Asia Pacific Journal of Human Resources*, p. 341–359. DOI: https://doi.org/10.1111/1744-7941.12140

Author contributions: All the authors have contributed equally to the research paper.